AMT
Magnetic Mixers



Designed complying with the rules for pharmaceutical and biotechnology industries, our AMT aseptic magnetic mixer contributes to maximize product yield in a wide volume ranges of the tanks. Thanks to its technology, it enables to the total integrity of the tank.
The bottom mounting allows to keep clear the tank from any other body, such as shafts from the top and baffles, thus easening vessel access, cleaning and maintenance.
Suitable for wide range of viscosities, it provides efficient mixing at low speeds, which ensures gentle product treatment, as well as at high speeds for high-intensity mixing.

WORKING PRINCIPLE

The impeller installed inside the tank rotates due to the torque from the magnetic coupling given by the external drive unit.
This magnetic transmission avoids the occurrence of cross contamination between product and external environment, a typical problem of the use of devices with mechanical seals (shafts, seals and other equipment).

APPLICATION:

Designed for meeting the requirements of the plants in the Pharmaceutical, Food & Beverage, Cosmetics, Dairy, Fine Chemicals industries.
The geometry of the impeller allows an excellent axial pumping flow and very low shear rate for different applications: mixing, dilution, maintaining in suspension...

STANDARD CODE	Volume range Vigorous/Gentle	Motor Power rating	Weight	Impeller Diameter	Weld plate Diameter/Thickness
AMT-02PBAM-AF-1B	5 – 20 L	60 w-0,08 hp	4 Kg	Ø 82 mm	Ø 60 x 10 mm
AMT-04PAAA-AF-1B	10 – 50 L	120 w-0,16 hp	7 Kg	Ø 105 mm	Ø 70 x 10 mm
AMT-06PAAS-AF-1B	50 – 150 L	250 w-0,34 hp	9 Kg	Ø 130 mm	Ø 85 x 15 mm
AMT-08PAAS-AF-1B	150 – 500 L	0,55 kw-0,74 hp	15 Kg	Ø 155 mm	Ø 125 x 23 mm
AMT-12PAAS-AF-1B	300 – 2.000 L	0,75 kw-1,00 hp	20 Kg	Ø 175 mm	Ø 150 x 23 mm
AMT-20PAAS-AF-1A	1.000 – 3.000 L	1,50 kw-2,01 hp	30 Kg	Ø 220 mm	Ø 185 x 23 mm
AMT-32PAAS-AF-1A	2.000 – 6.000 L	2,20 kw-2,95 hp	45 Kg	Ø 280 mm	Ø 250 x 30 mm
AMT-64PACW-AF-1A	3.000 – 20.000 L	5,50 kw-7,38 hp	114 Kg	Ø 290 mm	Ø 350 x 50 mm

- The mixing capacities above are based on aqueous like products, with a density of 1.000 Kg/m3 and a viscosity of 1 cp.
- Typical applications for "Gentle mixing" are where solid are held in suspension or where powders easily dissolve into the liquid.
- Typical applications for "Vigorous mixing" are where a vortex is required for blending of powders into a liquid.

Advantages :

- Maximum process efficiency, minimal prduct loss
- Optimal flow with higher efficiency and less energy consumption
- Great flexibility in volume, viscosity, speed
- Optimized sanification due to fully drainability and open design of the impeller
- Minimized downtime due to ease of maintenance

DATASHEETS

Last updates can be found on our website - www.aerreinox.it
In the interests of development of the product, we reserve the right to change the specifications without prior notice

Aerre Inox S.r.l.
Via Gerola n.4 – 26010 FIESCO (CR) Italy
Tel. +39. 0374.370828 info@aerreinox.it
www.aerreinox.it VAT IT 00962930194

Technical Information:

Material wetted parts:

Welding plate	stainless steel AISI 316L 1.4435 (from 02 to 12) - 1.4404 (20 -32-64)
Impeller	stainless steel AISI 316L 1.4435 (from 02 to 12) - 1.4404 (20 -32-64)
Static bearing	tungsten Carbide (standard), Silicon Carbide, Zirconium Oxide
Dinamic bearing	tungsten Carbide (standard), Silicon Carbide, Zirconium Oxide
Seals for static bearing	FEP (silicone core, PTFE coated)
Fixing screw	stainless steel AISI 316L 1.4435 (from 02 to 12) - 1.4404 (20 -32-64)

Surface Finish Ra ≤ 0,5µm (OPTIONAL: electropolishing, other on request)

Welding plate:

Design pressure	+10 bar(g)
Design temperature	-80 to +200°C

In compliance with PED Directive 2014/68/EU

Mixer working temperature 0°C ÷ 150°C (Only for sterilization or short time)

Motor data:

Motor type	Three-phase asynchronous motor
Voltage	230/400 V AC
Frequency	10-50Hz (operated with VFD, not supplied)
Number of poles	2
Protection type	IP 55

PTC temperature probe included

Painting RAL 9010 (not available for ATEX)

Speed range 80÷380rpm (AMT-02 90 ÷400rpm) ***other on request***

Certification

3.1 material certificates (in contact) according to UNI EN 10204
FDA
USP Class VI
Optional ATEX version
other certificates on request

Labelling for full traceability purposes each welding plate and complete mixer are individually marked with part number and batch

Warning: the assembled Mixer may have different design temperature and / or pressure limits.
The weakest component in the assembled product determines the maximum design temperature and pressure limits.

STANDARD

Mixer size	Motor power rating	Poles	Gear box ratio	Min/max rpm for mixer
AMT-02	0.06kw/0.08 hp	2	1/7	90÷400rpm
AMT-04	0.12kw/0.16 hp	2	1/7.5	80÷380rpm
AMT-06	0.25kw/0.34 hp	2	1/7.5	80÷380rpm
AMT-08	0.55 kw/0.74 hp	2	1/7.5	80÷380rpm
AMT-12	0.75 kw/1.00 hp	2	1/7.5	80÷380rpm
AMT-20	1.50 kw/2.01 hp	2	1/7.5	80÷380rpm
AMT-32	2.20 kw/2.95 hp	2	1/7.5	80÷380rpm
AMT-64	5.50 kw/7.38 hp	2	1/7.24	80÷380rpm

ATEX

Mixer size	Motor power rating	Poles	Gear box ratio	Min/max rpm for mixer
AMTA02	0.12kw/0.16hp	2	1/7	80÷400rpm
AMTA04	0.12kw/0.16hp	2	1/7	80÷400rpm
AMTA06	0.25kw/0.34hp	2	1/7	80÷400rpm
AMTA08	0.55kw/0.74hp	2	1/7	80÷400rpm
AMTA12	0.75kw/1.00hp	2	1/7	80÷400rpm
AMTA20	1.50kw/2.01hp	2	1/7	80÷400rpm
AMTA32	2.20kw/2.95hp	2	1/7	80÷400rpm
AMTA64	5.50kw/7.38hp	2	1/7	80÷400rpm

DATASHEETS

Last updates can be found on our website - www.aerreinox.it
In the interests of development of the product, we reserve the right to change the specifications without prior notice

Aerre Inox S.r.l.
Via Gerola n.4 – 26010 FIESCO (CR) Italy
Tel. +39. 0374.370828 info@aerreinox.it
www.aerreinox.it VAT IT 00962930194

Nominal dimensions



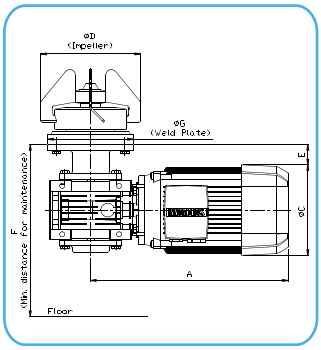

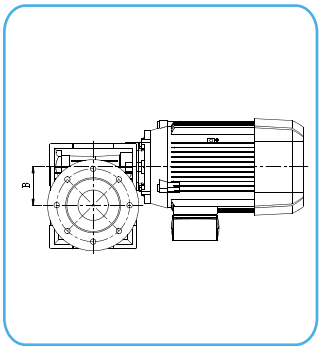

CODE	A mm	B mm	ØC motor	ØD impeller	E mm	F mm	ØG weld plate
AMT-02PBAM-AF-1B	195	28	Ø92 mm	Ø82 mm	15	180	Ø60 mm
AMT-04PAAA-AF-1B	220	30	Ø110 mm	Ø105 mm	12	200	Ø70 mm
AMT-06PAAS-AF-1B	235	30	Ø120 mm	Ø130 mm	5	200	Ø85 mm
AMT-08PAAS-AF-1B	290	50	Ø140 mm	Ø155 mm	33	250	Ø125 mm
AMT-12PAAS-AF-1B	350	63	Ø160 mm	Ø175 mm	37	280	Ø150 mm
AMT-20PAAS-AF-1A	410	75	Ø175 mm	Ø220 mm	31	290	Ø185 mm
AMT-32PAAS-AF-1A	450	75	Ø180 mm	Ø280 mm	71	350	Ø250 mm
AMT-64PACW-AF-1A	590	31	Ø220 mm	Ø290 mm	97	500	Ø350 mm



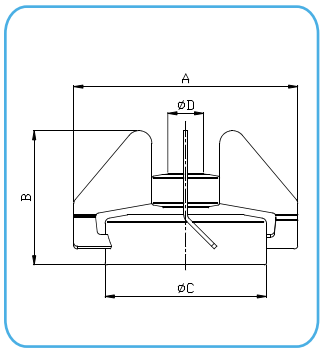

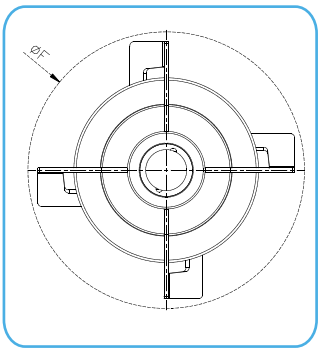

CODE	A mm	B mm	ØC mm	ØD mm	ØF mm	Weight Kg	Compatible mixer type
TM2/4-T-AR	82	58.5	Ø63	22	95	0,49	AMT-02
TM4/4-T-AR	105	76	Ø74	22	120	0,85	AMT-04
TM6/4-T-AR	130	81.5	Ø88	22	145	1,05	AMT-06
TM8/4-T-AR	155	103	Ø109	28	175	1,80	AMT-08
TM12/4-T-AR	175	105	Ø126	28	190	2,20	AMT-12
TM20/4-T-AR	220	119	Ø164	40	235	3,20	AMT-20
TM32/4-T-AR	280	126.5	Ø209	40	295	4,75	AMT-32
TM64/4-T-AR	290	168.5	Ø209	40	310	7,05	AMT-64

DATASHEETS

Last updates can be found on our website - www.aerreinox.it

In the interests of development of the product, we reserve the right to change the specifications without prior notice

Aerre Inox S.r.l.
Via Gerola n.4 – 26010 FIESCO (CR) Italy
Tel. +39. 0374.370828 info@aerreinox.it
www.aerreinox.it VAT IT 00962930194

Nominal dimensions



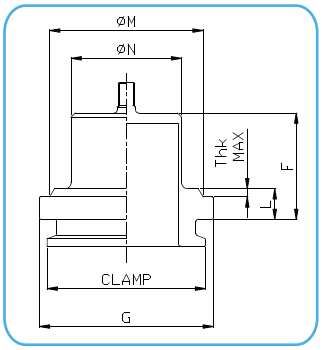

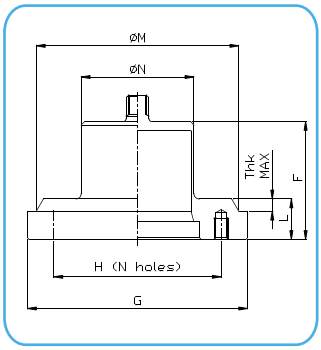

CODE	F mm	G mm	L mm	Thk max mm	Ø H mm	Holes qty x thread	Clamp	Ø M tank hole	Ø N	Weight Kg
MM2/9/1-T	45	60	10	3	-	-	1"½	55	31	0,40
MM4/9/1-T	47	70	10	4	-	-	2"	60	40	0,50
MM6/9/1-T	52	85	15	4	-	-	2" ½	75	54	0,80
MM8/9/1-T	67	125	23	7	95	8 x M8	-	115	64	1,90
MM12/9/1-T	67	150	23	7	120	8 x M8	-	140	84	2,50
MM20/9/1-T	70	185	23	7	160	9 x M8	-	175	124	3,55
MM32/9/1-T	81	250	30	9	200	8 x M12	-	240	166	8,70
MM64/9/1-T	137	350	50	15	250	8 x M12	-	340	166	32,15

Thk : to be defined on purchase order phase
higher thickness on request

DATASHEETS

AMTMagneticMixertechnicalsheetRev17

Last updates can be found on our website - www.aerreinox.it
In the interests of development of the product, we reserve the right to change the specifications without prior notice

Aerre Inox S.r.l.
Via Gerola n.4 – 26010 FIESCO (CR) Italy
Tel. +39. 0374.370828 info@aerreinox.it
www.aerreinox.it VAT IT 00962930194

EXPLODED VIEW

Size	Impeller	KIT static bearing
AMT-02	TM2/4-T-AR	KMT-04-AF-AR
AMT-04	TM4/4-T-AR	KMT-04-AF-AR
AMT-06	TM6/4-T-AR	KMT-04-AF-AR
AMT-08	TM8/4-T-AR	KMT-08-AF-AR
AMT-12	TM12/4-T-AR	KMT-08-AF-AR
AMT-20	TM20/4-T-AR	KMT-20-AF-AR
AMT-32	TM32/4-T-AR	KMT-20-AF-AR
AMT-64	TM64/4-T-AR	KMT-20-AF-AR

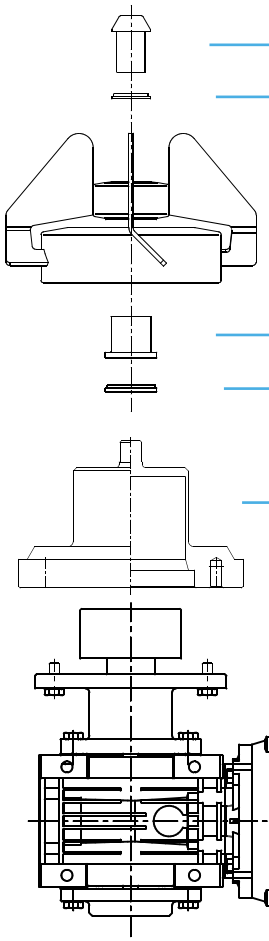

Fixing screw
O-ring for fixing screw
Impeller
Static bearing
O-ring for static bearing
Welding plate
Drive unit

AMT — 20 P AAS — A F 050 — A — 1 A

- [—] Standard
- [**A**] ATEX

Size 02,04,06,08,12,20,32,64

Welding Flange
- **P** standard **NOT** included
- **L** for insulation tank **NOT** included

- **Drive unit**

Size	Standard	ATEX
02	BAM	BAE
04	AAA	BAE
06	AAS	BAE
08	AAS	BAE
12	AAS	BAE
20	AAS	BAE
32	AAS	BAE
64	ACW	BAC

Bearings
- **A** tungsten carbide - **E** silicon carbide - **I** zirconium oxide

Seal
F FEP (silicone core, PTFE coated) - other material on request

Extension
mm of shaft lenght over than standard execution
(if the extension is not requested, remove this part)

Optional
A speed counter
B dismounting system (only sizes 20-32-64)
C predisposition for speed counter
D speed counter + dismounting system
E predisposition for dismounting system

A 1.4404 (20-32-64)
B 1.4435 (from 02 to 12)
other on request

1 Std. surface finish
5 Electropolish

DATASHEETS

Last updates can be found on our website - www.aerreinox.it
In the interests of development of the product, we reserve the right to change the specifications without prior notice

Aerre Inox S.r.l.
Via Gerola n.4 – 26010 FIESCO (CR) Italy
Tel. +39. 0374.370828 info@aerreinox.it
www.aerreinox.it VAT IT 00962930194

OPTIONAL

- Welding plate with higher thickness (**A**)
- Asportable welding plate
- Customized welding plate
- Shaft extension (**B**)
- Speed counter
- Dismounting system of magnetic coupling (**C**)
- 24Vdc motor
- Pneumatic motor
- Stainless steel motor
- Different drive unit
- Different RPM
- Electropolishing
- Other surface finishing
- Other materials
- Mounting tool (**D**)
- Welding tools (**E**)
- Customized impellers (**F**)
- ATEX

  II 2G Ex h IIB T4 Gb X
  II 2D Ex h IIIC T135°C Db X

A

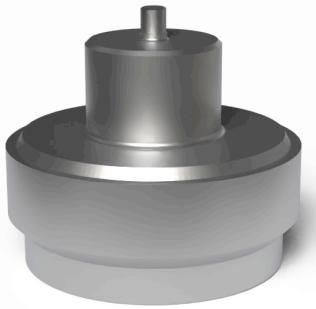

B

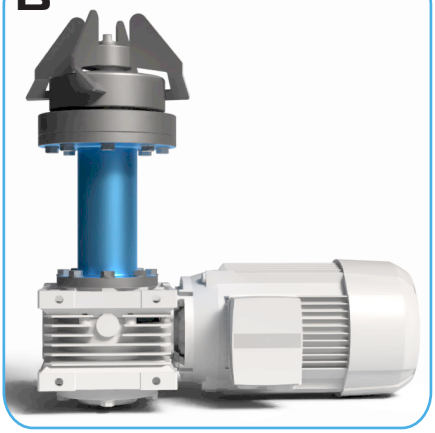

C

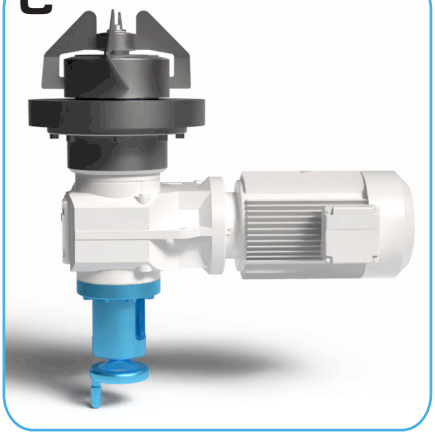

D



E

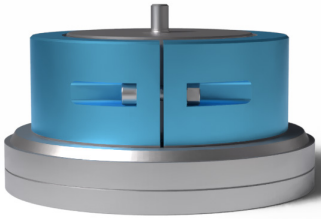

F

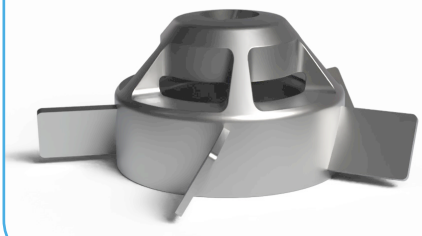

DATASHEETS

Last updates can be found on our website - www.aerreinox.it
In the interests of development of the product, we reserve the right to change the specifications without prior notice

Aerre Inox S.r.l.
Via Gerola n.4 – 26010 FIESCO (CR) Italy
Tel. +39. 0374.370828 info@aerreinox.it
www.aerreinox.it VAT IT 00962930194